OZONE MAGNETIC ELLIPTICAL
SF-E3803
USER MANUAL

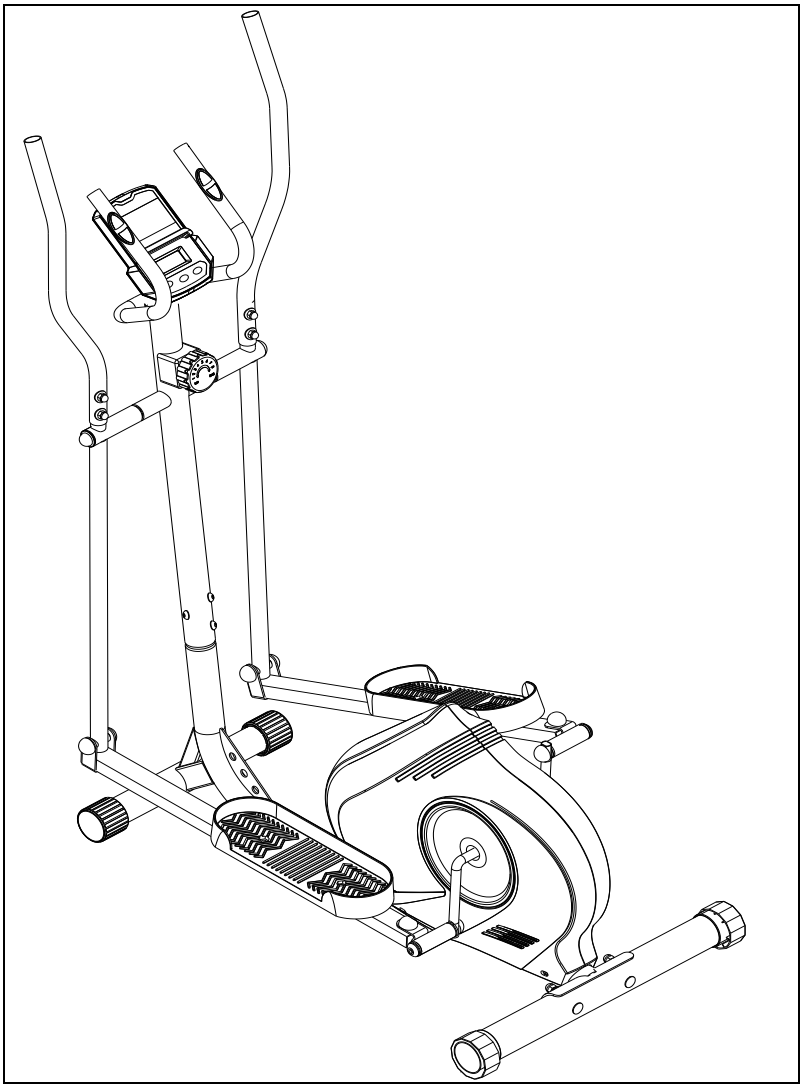

IMPORTANT! Please retain owner's manual for maintenance and adjustment instructions. Your satisfaction is very important to us, **PLEASE DO NOT RETURN UNTIL YOU HAVE CONTACTED US**: support@sunnyhealthfitness.com or 1- 877 - 90SUNNY (877-907-8669).

WWW.SUNNYHEALTHFITNESS.COM

IMPORTANT SAFETY INFORMATION

We thank you for choosing our product. To ensure your safety and health, please use this equipment correctly. It is important to read this entire manual before assembling and using the equipment. Safe and effective use can only be achieved if the equipment is assembled, maintained, and used properly. It is your responsibility to ensure that all users of the equipment are informed of all warnings and precautions.

1. Before starting any exercise program, you should consult your physician to determine if you have any medical or physical conditions that could put your health and safety at risk or prevent you from using the equipment properly. Your physician's advice is essential if you are taking medication that affects your heart rate, blood pressure, or cholesterol level.
2. Be aware of your body's signals. Incorrect or excessive exercise can damage your health. Stop exercising if you experience any of the following symptoms: pain, tightness in your chest, irregular heartbeat, shortness of breath, lightheadedness, dizziness, or feelings of nausea. If you do experience any of these conditions, you should consult your physician before continuing with your exercise program.
3. Keep children and pets away from the equipment. The equipment is designed for adult use only.
4. Use the equipment on a solid, flat level surface with a protective cover for your floor or carpet. To ensure safety, the equipment should have at least 2 feet (60 CM) of free space all around it.
5. Ensure that all nuts and bolts are securely tightened before using the equipment. The safety of the equipment can only be maintained if it is regularly examined for damage and/or wear and tear.
6. Always use the equipment as indicated. If you find any defective components while assembling or checking the equipment, or if you hear any unusual noises coming from the equipment during exercise, discontinue use of the equipment immediately and do not use until the problem has been rectified.
7. Wear suitable clothing while using the equipment. Avoid wearing loose clothing that may become entangled in the equipment.
8. Do not place fingers or objects into the moving parts of the equipment.
9. The maximum weight capacity of this unit is 220 pounds (100 KG).
10. The equipment is not suitable for therapeutic use.
11. To avoid bodily injury and/or damage to the product or property, proper lifting and moving are required.
12. Your product is intended for use in cool and dry conditions. You should avoid storage in extreme cold, hot or damp areas as this may lead to corrosion and other related problems.
13. This equipment is designed for indoor and home use only; it is not intended for commercial use.

EXPLODED DIAGRAM 1

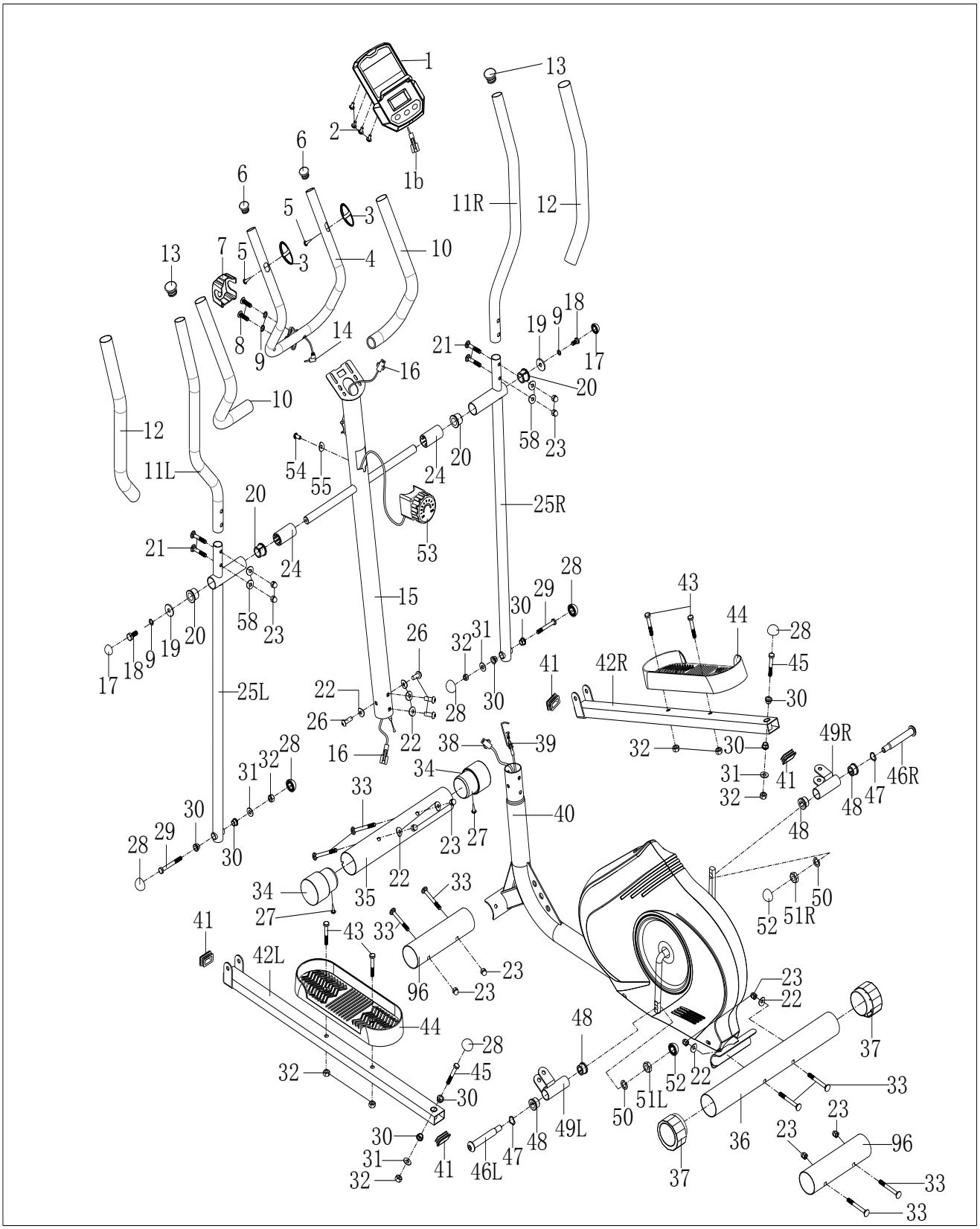

EXPLODED DIAGRAM 2

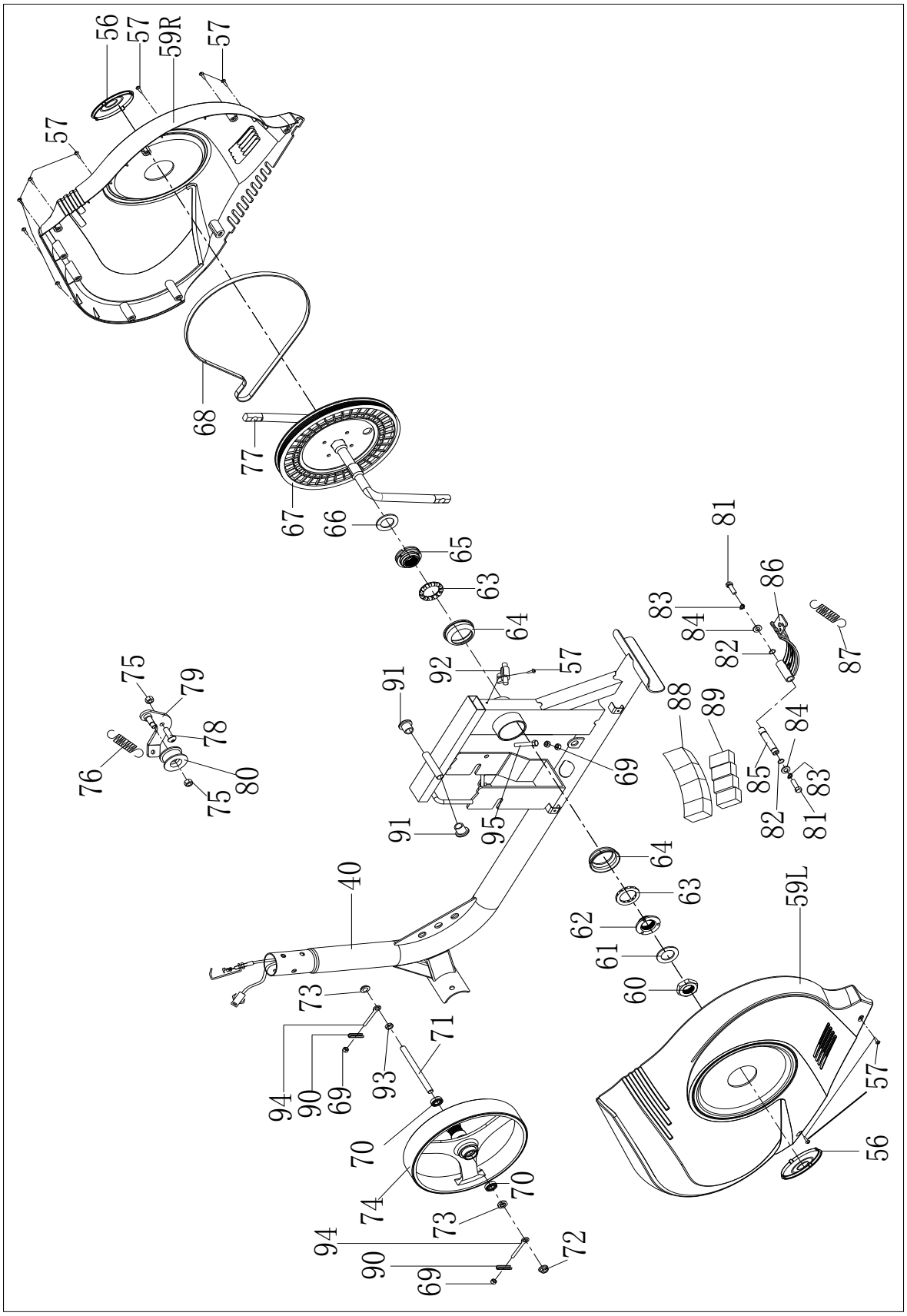

PARTS LIST

No.	Description	Spec.	Qty.
1	Computer		1
1b	Link Wire of Computer		1
2	Screw	M5*10	4
3	Pulse	Φ25	2
4	Middle Handlebar		1
5	Screw	ST4.2*19	2
6	End Cap	Φ25	2
7	Small Cover		1
8	Bolt	M8*30	2
9	Spring Washer	D8	4
10	Foam Grip		2
11L/R	Handlebar (L/R)		2
12	Foam Grip		2
13	End Cap	Φ28	2
14	Handle Pulse Wire		1
15	Upright Post		1
16	Trunk Wire		1
17	End Cap	S13	2
18	Hexagon Bolt	M8*20	2
19	Washer	D8*Φ32*2	2
20	Alloy Wrap 2	Φ32*Φ19*28	4
21	Carriage Bolt	M8*40	4
22	Arc Washer	D8*Φ20*2*R30	8
23	Domed Nut	M8	12
24	Long Spacer		2
25L/R	Swing Rod (L/R)		2
26	Screw	M8*16	4
27	Screw	ST4.2*16	2
28	End Cap	S17	6
29	Bolt	M10*60	2
30	Bushing	Φ14*12.5*Φ10.1	8
31	Washer	D10*Φ20*2	4
32	Nylon Nut	M10	8
33	Carriage Bolt	M8*72	8
34	End Cap	Φ60	2
35	Front Stabilizer		1
36	Rear Stabilizer		1
37	End Cap	Φ60	2
38	Sensor Wire		1
39	Tension Cable		1
40	Main Frame		1
41	End Cap	J40*25	4
42L/R	Pedal Tube (L/R)		2
43	Hexagon Bolt	M10*45	4
44	Pedal		2

No.	Description	Spec.	Qty.
45	Bolt	M10*50	2
46L/R	Pedal Bolt (L/R)	1/2”	2
47	Wave Washer	D17	2
48	Bushing	Φ24*20*Φ16.1	4
49L/R	U Bracket (L/R)		2
50	Spring Washer	1/2”	2
51L/R	Nylon Nut (L/R)	1/2”	2
52	End Cap	S19	2
53	Tension Control Knob		1
54	Screw	M5*16	1
55	Arc Washer	D5*Φ20*1.5*R30	1
56	Crank Cover		2
57	Screw	ST4.2*19	11
58	Arc Washer	D8*Φ20*1.5*R16	4
59L/R	Belt Cover (L/R)		2
60	Hex Nut		1
61	Locking Washer		1
62	Locking Nut-Left		1
63	Open Face Bearing		2
64	Bearing Housing		2
65	Locking Nut-Right		1
66	Locking Washer		1
67	Belt Wheel		1
68	Belt		1
69	Hexagon Nut	M6	4
70	Bearing	6000	2
71	Axle		1
72	Hexagon Flange Nut	M10	1
73	Nut	M10*2	2
74	Flywheel		1
75	Nylon Nut	M8	2
76	Tension Spring	Φ2.5*Φ16*72.5*N17	1
77	Crank		1
78	Bolt		1
79	Steel Bracket		1
80	Idler Wheel		1
81	Hexagon Bolt	M6*16	2
82	C-clip	D12	2
83	Spring Washer	D6	2
84	Washer	D6*Φ16*1.5	2
85	Axle		1
86	Magnetic Board		1
87	Tension Spring	Φ1.2*Φ10*50*N26	1
88	Plastic Lattice Magnet		1
89	Magnet		4

No.	Description	Spec.	Qty.		No.	Description	Spec.	Qty.
90	U Stopper		2		96	Shipping Tube		2
91	End Cap		2		A	Spanner	S13-14-15	1
92	Sensor Socket		1		B	Allen Wrench	S6	1
93	Nut	M10*3	1		C	Allen Wrench	S8	1
94	Bolt	M6*36	2		D	Spanner	S17-19	1
95	Hexagon Bolt	M6*36	1					

HARDWARE PACKAGE

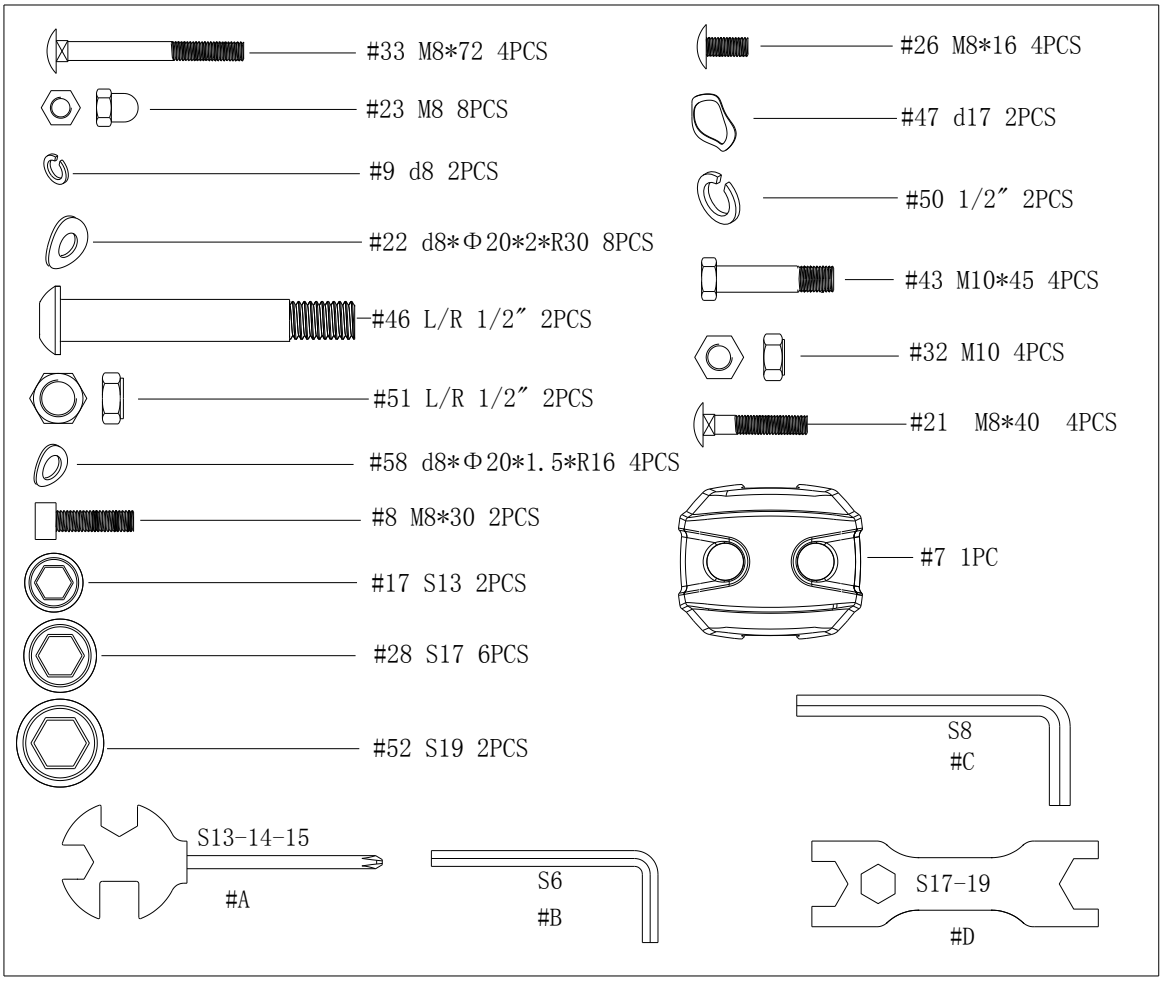

Ordering Replacement Parts (U.S. and Canadian Customers only)

Please provide the following information in order for us to accurately identify the part(s) needed:

- ✓ The model number (found on cover of manual)
- ✓ The product name (found on cover of manual)
- ✓ The part number found on the “EXPLODED DIAGRAM” and “PARTS LIST” (found near the front of the manual)

Please contact us at support@sunnyhealthfitness.com or 1- 877 - 90SUNNY (877-907-8669).

ASSEMBLY INSTRUCTIONS

We value your experience using Sunny Health and Fitness products. For assistance with parts or troubleshooting, please contact us at support@sunnyhealthfitness.com or 1-877-90SUNNY (877-907-8669).

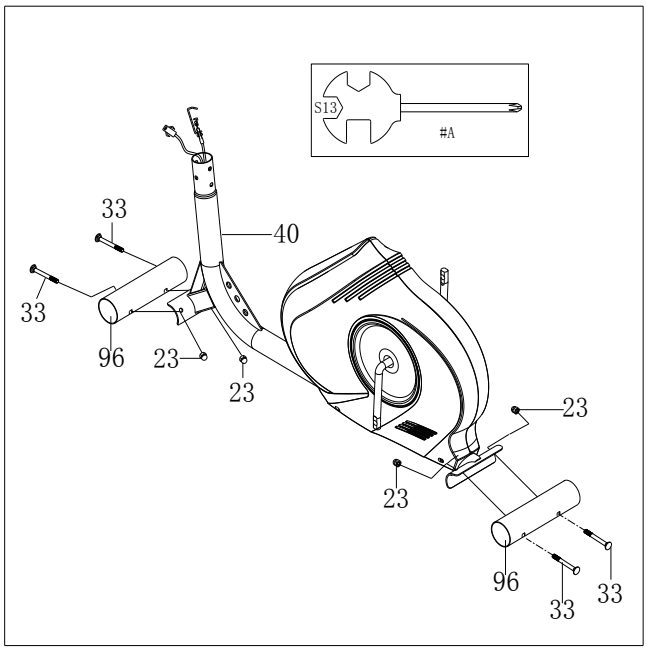

STEP 1:

Unscrew the 4 **Carriage Bolts (No. 33)** with **Spanner (No. A)** and remove the 4 **Domed Nuts (No. 23)** and 2 **Shipping Tubes (No. 96).**

You may save these parts [**Carriage Bolts (No. 33)**, **Domed Nuts (No. 23)**, **Shipping Tubes (No. 96)**] in case you'd like to repackage and transport this elliptical in the future.

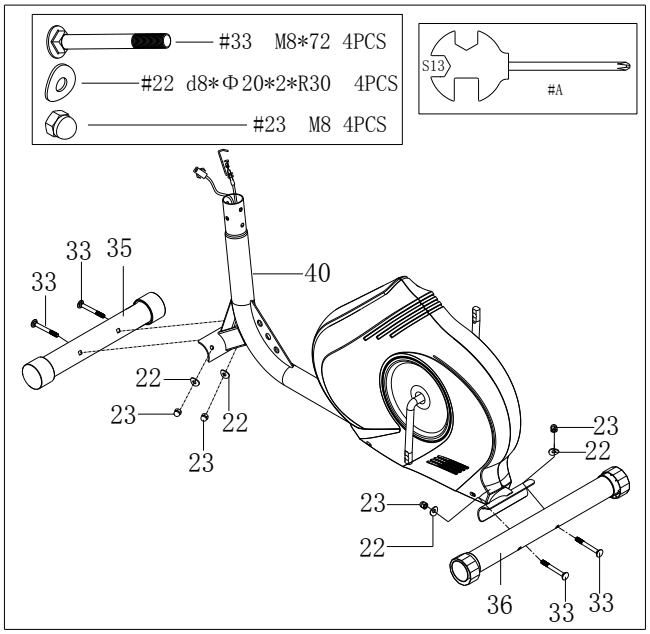

STEP 2:

Attach **Front Stabilizer (No. 35)** and **Rear Stabilizer (No. 36)** onto **Main Frame (No. 40)** with 4 **Carriage Bolts (No. 33)**, 4 **Domed Nuts (No. 23)**, and 4 **Arc Washers (No. 22)**. Tighten and secure with **Spanner (No. A).**

We value your experience using Sunny Health and Fitness products. For assistance with parts or troubleshooting, please contact us at support@sunnyhealthfitness.com or 1-877-90SUNNY (877-907-8669).

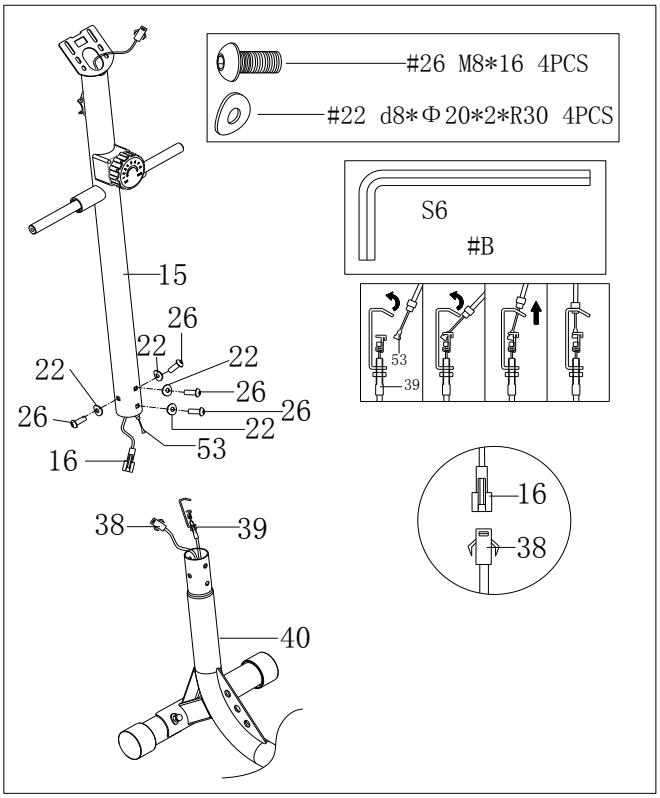

STEP 3:

Connect **Trunk Wire (No. 16)** and **Sensor Wire (No. 38)** together.

Put the cable of **Tension Control Knob (No. 53)** into the cable lock of **Tension Cable (No. 39)**. Then, pull the resistance cable of **Tension Control Knob (No. 53)** upward and force it into the slot of metal bracket of **Tension Cable (No. 39).** Insert the metal fitting on the resistance cable of **Tension Control Knob (No. 53)** into the hole at the end of the slot in the metal bracket of **Tension Cable (No. 39).**

After properly connecting the tension cable assembly, attach **Upright Post (No. 15)** to the tube of **Main Frame (No. 40)** with 4 **Screws (No. 26)** and 4 **Arc Washers (No. 22)**. Tighten and secure with **Allen Wrench (No. B).**

We value your experience using Sunny Health and Fitness products. For assistance with parts or troubleshooting, please contact us at support@sunnyhealthfitness.com or 1-877-90SUNNY (877-907-8669).

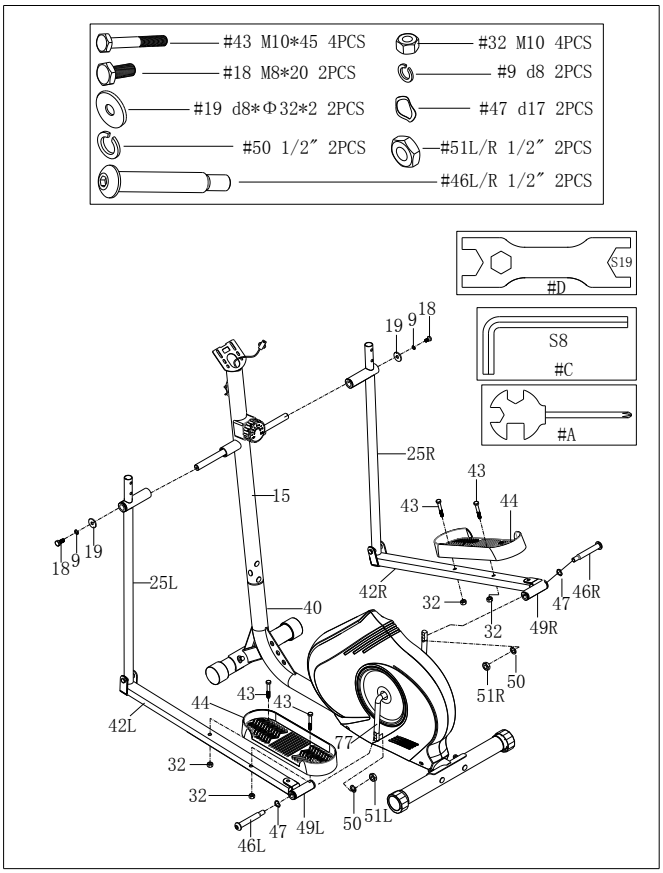

STEP 4:

Remove the pre-assembled 2 **Hexagon Bolts (No. 18),** 2 **Spring Washers (No. 9)**, and 2 **Washers (No. 19)** from **Upright Post (No. 15)** with **Spanner (No. A).**

Slide **Swing Rods (No. 25L/R)** onto **Upright Post (No. 15)** with 2 **Hexagon Bolts (No. 18)**, 2 **Spring Washers (No. 9)**, and 2 **Washers (No. 19)** that were removed**.** Tighten and secure with **Spanner (No. A).**

Attach **Left U Bracket (No. 49L)** to the **Crank (No. 77)** with **Left Pedal Bolt (No. 46L), Wave Washer (No. 47).** Turn the **Left Pedal Bolt (No. 46L)** *counter-clockwise* as tightly as you can with your hand. Secure by tightening **Left Nylon Nut (No. 51L)** and **Spring Washer (No. 50)** *clockwise.* Then, use **Spanner (No. D)** and **Allen Wrench (No. C)** to tighten securely**.**

Attach **Right U Bracket (No. 49R)** to the **Crank (No. 77)** with **Right Pedal Bolt (No. 46R), Wave Washer (No. 47).** Turn the **Right Pedal Bolt (No. 46R)** *clockwise* as tightly as you can with your hand. Secure by tightening **Right Nylon Nut (No. 51R)** and **Spring Washer (No. 50)** *counter-clockwise.* Then, use **Spanner (No. D)** and **Allen Wrench (No. C)** to tighten securely**.**

Attach 2 **Pedals (No. 44)** to the **Pedal Tubes (No. 42L/R)** with 4 **Hexagon Bolts (No. 43)** and 4 **Nylon Nuts (No. 32)**. Tighten and secure with **Spanner (No. D).**

We value your experience using Sunny Health and Fitness products. For assistance with parts or troubleshooting, please contact us at support@sunnyhealthfitness.com or 1-877-90SUNNY (877-907-8669).

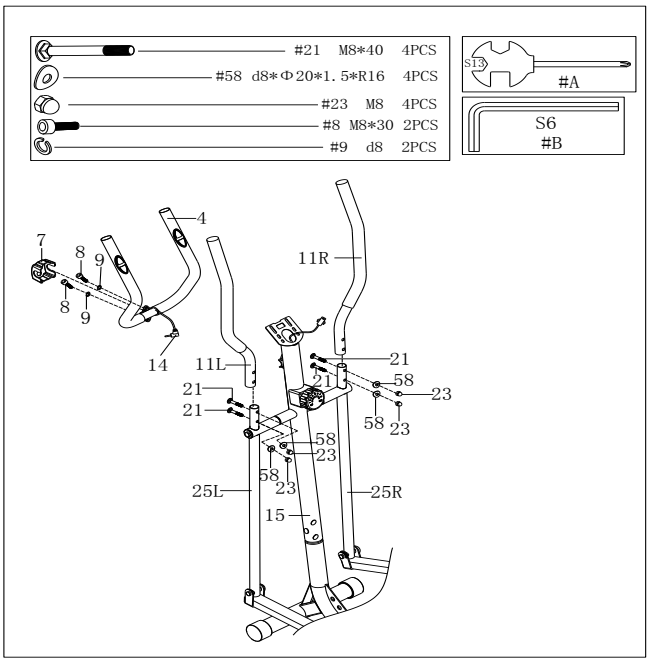

STEP 5:

Attach **Middle Handlebar (No. 4)** to **Upright Post (No. 15)** with 2 **Bolts (No. 8)** and 2 **Spring Washers (No. 9)**. Tighten and secure with **Allen Wrench (No. B)**. Then, attach **Small Cover (No. 7)** onto **Middle Handlebar (No. 4)**.

Attach **Handlebars (No. 11L/R)** to the **Swing Rods (No. 25L/R)** with 4 **Carriage Bolts (No. 21),** 4 **Arc Washers (No. 58)**, and 4 **Domed Nuts (No. 23**). Tighten and secure with **Spanner (No. A)**.

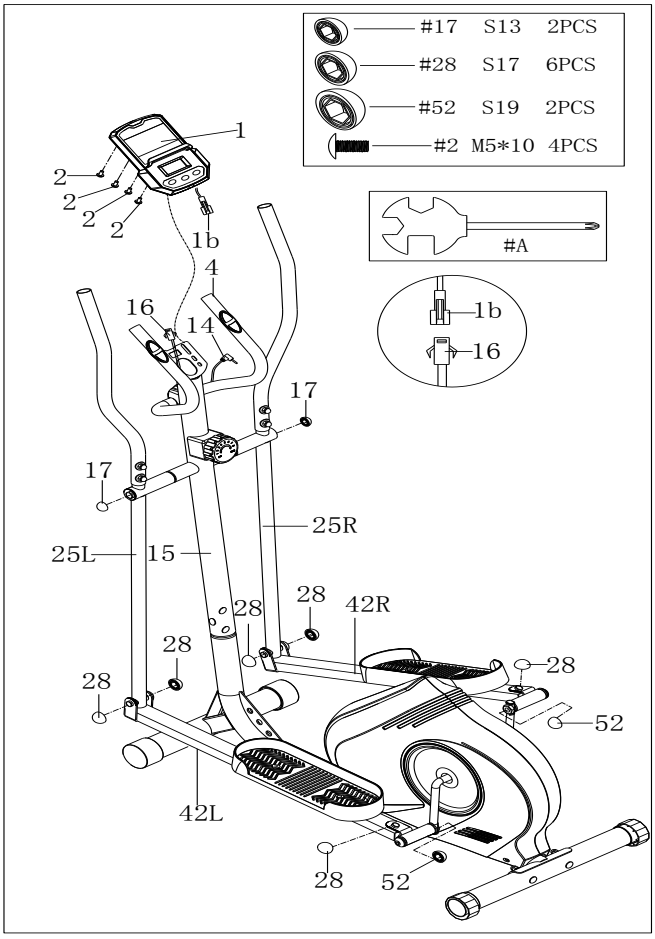

STEP 6:

Remove the pre-assembled 4 **Screws (No. 2)** from the back of the **Computer (No. 1).**

Connect **Link Wire of Computer (No. 1b)** with **Trunk Wire (No. 16)**. Then, attach **Computer (No. 1)** to the **Upright Post (No. 15)** with 4 **Screws (No. 2)** that were removed. Tighten and secure with **Spanner (No. A)**.

Insert **Handle Pulse Wire (No. 14)** into the hole on the back of **Computer (No. 1)**.

Attach the **End Caps (No. 17 & No. 28 & No. 52)** onto **Swing Rods (No. 25L/R)** and **Pedal Tubes (No. 42L/R)** separately.

The assembly is complete!

BATTERY INSTALLATION AND REPLACEMENT

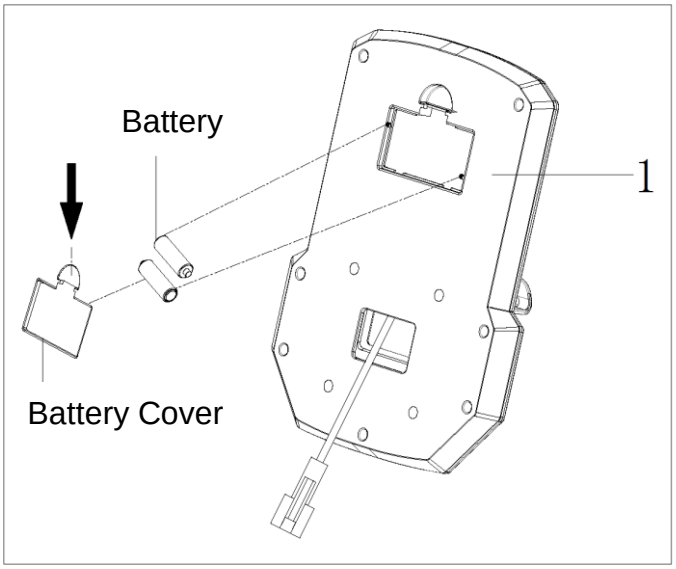

BATTERY INSTALLATION:

1. Take out 2 AAA batteries from the plastic bag for manual.
2. Press the buckle of battery cover on the back of the **Computer (No. 1)**, then remove battery cover.
3. Install 2 AAA batteries into the battery case on the back of the **Computer (No. 1)**. Pay attention to the battery + and – ends before installing.
4. Press the buckle of battery cover, then put the battery cover back to the back of the **Computer (No. 1).**

The installation is complete!

BATTERY REPLACEMENT:

1. Press the buckle of battery cover on the back of the **Computer (No. 1)**, then remove battery cover.
2. Remove the 2 old AAA batteries in the battery case and install 2 new AAA batteries into the battery case on the back of the **Computer (No. 1)**. Pay attention to the battery + and – ends before installing.
3. Press the buckle of battery cover, then put the battery cover back to the back of the **Computer (No. 8).**

The replacement is complete!

NOTE: Always change both batteries at the same time. Do not mix battery types and do not mix old and new batteries. Dispose batteries according to your state and regional guidelines.

ADJUSTMENTS & USAGE GUIDE

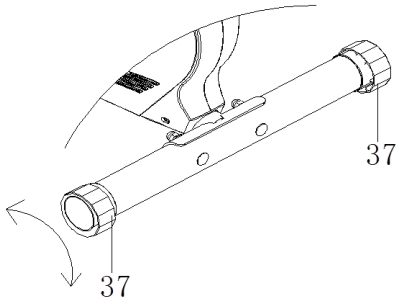

ADJUSTING THE BALANCE

To achieve a smooth and comfortable ride, you must ensure that the stability of the elliptical is secured. If you notice that the elliptical is unbalanced during use, adjust the **End Caps (No. 37)** located on the rear stabilizer until the elliptical becomes levelled with the floor surface.

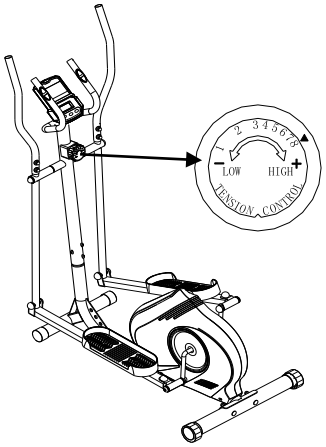

ADJUSTING THE TENSION

Adjust the tension by rotating the **Tension Control Knob (No. 53)** *clockwise* to increase the level of resistance. Rotate the **Tension Control Knob (No. 53)** *counter-clockwise* to decrease the level of resistance.

Tension levels are set at Level 1 being the lowest and Level 8 being the highest.

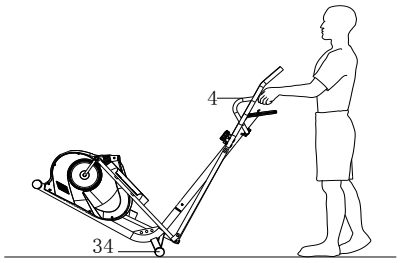

MOVING THE ELLIPTICAL

To move the elliptical, hold **Middle Handlebar (No. 4)** and tilt the elliptical until the movable wheels on the **End Caps (No. 34)** located on the front stabilizer touch the ground. With the wheels on the ground, you can transport the elliptical to the desired location with ease.

CLEANING

The elliptical can be cleaned with a soft, clean, and damp cloth. Do not use abrasives or solvents on plastic parts. Please wipe your perspiration off the elliptical after each use. Be careful not get excessive moisture on the computer display panel as this might cause electrical hazard or electronics to fail.

Please keep the elliptical, especially the computer, out of direct sunlight to prevent screen damage.

Please inspect all assembly bolts and pedals on the elliptical for proper tightness every week.

STORAGE

Store the elliptical in a clean and dry environment away from children.

EXERCISE COMPUTER

FUNCTION BUTTONS:

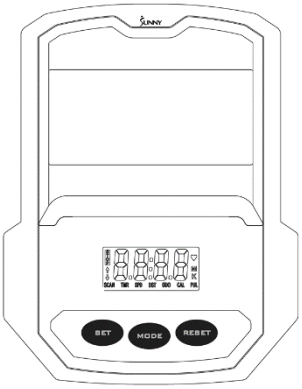

MODE: Press the button to select TIME, DISTANCE, and CAL to preset.
Press the button for selection function display value on LCD or enter after setting.
Press the button and hold for 3 seconds to reset all value except odometer to zero.
(When user replaces the batteries, all the values will reset to ZERO automatically).

SET: To set up the target value of TIME, DISTANCE, and CAL. Press the button and hold for 2 seconds to speed up the increment.

RESET: Press the button to reset function value when setting.
Press the button and hold for 3 seconds to reset all value except odometer to zero (When the user replaces batteries, all the values will reset to ZERO automatically).

FUNCTIONS & OPERATIONS:

1. BATTERY INSTALLATION:

Please install 2 AAA 1.5V batteries in the battery case on the back of computer. (Whenever batteries are removed, all the function values will be reset to zero.)

2. AUTO ON/OFF:

Once the user begins to exercise, the computer will show the workout value automatically. After about 4 minutes of inactivity, the computer will turn off. Odometer value does not reset to 0 when the computer turns off. When the user starts to exercise again, the workout value of odometer will accumulate continuously.

3. AUTO SCAN:

After the computer is powered on, press Mode key, the LCD will display all functions values from TIME-SPEED-DISTANCE-CALORIES-ODOMETER-PULSE. Each value will be held for 6 seconds.

4. SPEED:

Displays the current training speed from 0.0 to 99.9 MPH (Miles per hour).

5. DISTANCE:

Accumulates total distance from 0.0 up to 9999. The user may preset target time by pressing the SET & MODE button. Each increment is 0.1 M (Miles). Automatically counts down from targeting value during exercise.

6. TIME:

Accumulates total time from 00:00 up to 99:59. The user may preset target time by pressing SET & MODE button. Each increment is 1 minute.
Automatically count down from targeting value during exercise.

7. CALORIES:

Accumulates calories burned during training from 0 to 9999. The user may also preset the target calorie before training by pressing the SET & MODE button. Each setting increase is 1 cal. Automatically counts down from targeting value during exercise.

Note : This data is a rough guide which cannot be used in medical treatment.

8. ODOMETER:

Displays the total accumulated distance from 0 to 9999. User can also press mode key to display the odometer value.

9. PULSE:

The computer will display the user's heart rate in beats per minute during training.

10. RESET:

Press the button and hold for 2 seconds to reset all value except odometer to zero.

NOTE:

1. If the computer display is abnormal, please re-install the new batteries and try again. Always change both batteries at the same time. Do not mix battery types and do not mix old and new batteries.
2. Battery Spec: 1.5V UM-4 or AAA (2PCS).
3. Dispose the batteries safely, according to your state and regional guidelines.

TROUBLESHOOTING

PROBLEM	SOLUTION
There is no display on the computer.	1. Remove the computer and verify the wire that comes from the computer is properly connected to the wire that comes from the upright post. 2. Check if the batteries are correctly positioned and battery springs are in proper contact with batteries. 3. The batteries in the computer may be unresponsive. Change to new batteries.
The elliptical wobbles when in use.	Turn the end caps on the rear stabilizer as needed to level the elliptical.
The elliptical makes squeaking noise when in use.	The bolts may have become loose on the elliptical. Please inspect all the bolts and tighten any loose bolts.

Version 1.3

CONNECT WITH US

FOR FITNESS ARTICLES, VIDEOS & WORKOUTS

@SUNNYHEALTHANDFITNESS

@SUNNYHEALTHFITNESS

@SUNNYHEALTHFIT

/SUNNYHEALTHFITNESS

/SUNNYHEALTHANDFITNESS

SUNNY HEALTH & FITNESS

WWW.SUNNYHEALTHFITNESS.COM